AIXIN MEDICAL

USER MANUAL

AX-J2

High Speed

Dental Cutting Lathe



Description:

The AX-J2 High Speed Cutting Lathe is widely used to polish all kinds of metals in restorative dentistry. The housing of this machine is made of aluminum alloy, which makes it reliable and corrosion resistant. This machine has low noise and high power, the rotational speed can reach up to 14,000 rpm. The DEMCO grinding head which is imported from the USA ensures the quality of the machine.

Specifications:

Power supply voltage	AC220 / 110V 50HZ / 60HZ ±10%
Power	370W
Rotational speed	14000rpm
Dimensions	35×29×30 (cm)

Diagram:

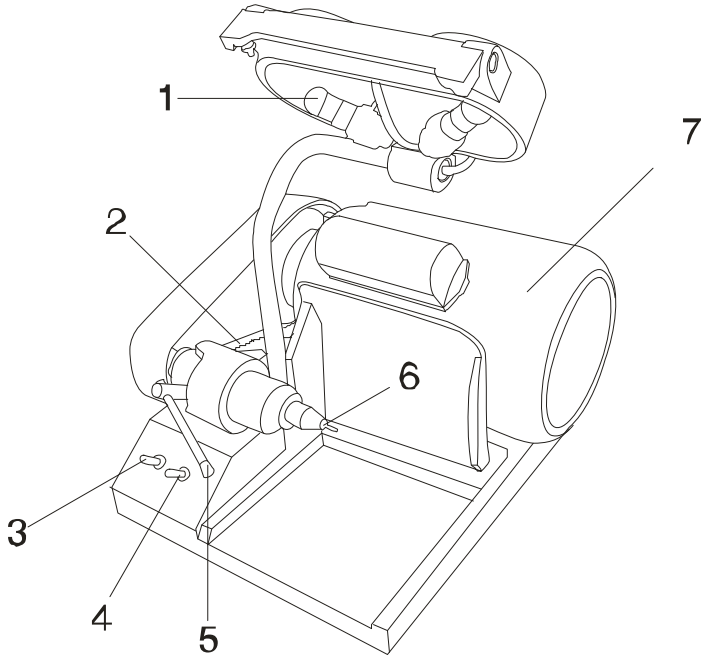

1. Light
2. Belt
3. Motor switch
4. Light switch
5. Adjusting handle
6. Clamp
7. Motor

Instructions:

1. Unpack the package, check if all the accessories are included. Read this manual carefully before using.
2. Connect the machine to a electric inlet, make sure the voltage is compatible with this machine.
3. Open the clamp with a spanner.
4. Put in a stone-holding pin or abrasive disc (make sure the stone-holding pin or the abrasive disc is compatible with the diameter of the clamp).
5. Rotate the switch from slow mode to fast mode, observe if the abrasive disc is shaking.

Cautions:

1. Do not put too much side force to the main axis and the clamp.
2. The emery wheel should be used with slow speed to avoid breaking which would hurt the users.
3. Do not let the machine idling for a long time.
4. If the belt is loose, loosen the screw under the head, turn the head inside to a suitable position. If the belt is still loose, please replace it. To change the belt, loosen the screw on the left side of the cover.

Accessories:

Manual	1
Fuse tube (5A)	2
Imported clamp	1
Hex spanner	1
Transmission belt	1

Contact Us
E-mail Address:
Dentalsalemall.com@gmail.com
Telephone Number: +86-023-68438829
Official Site:https://www.dentalsalemall.com